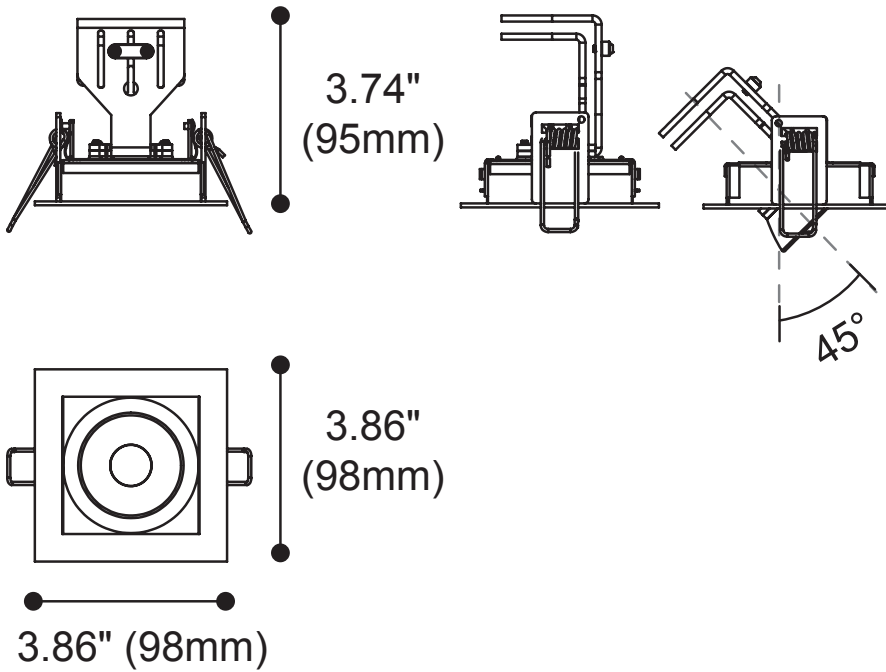
3.74"
(95mm)
45°
3.86"
(98mm)
3.86" (98mm)