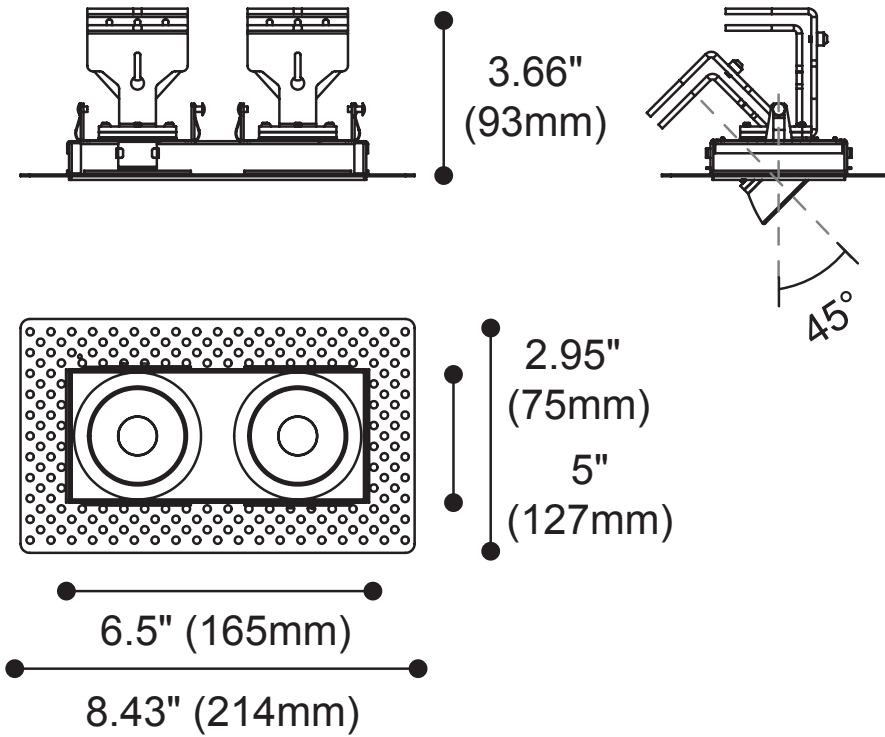
3.66"
(93mm)
45°
2.95"
(75mm)
5"
(127mm)
6.5" (165mm)
8.43" (214mm)