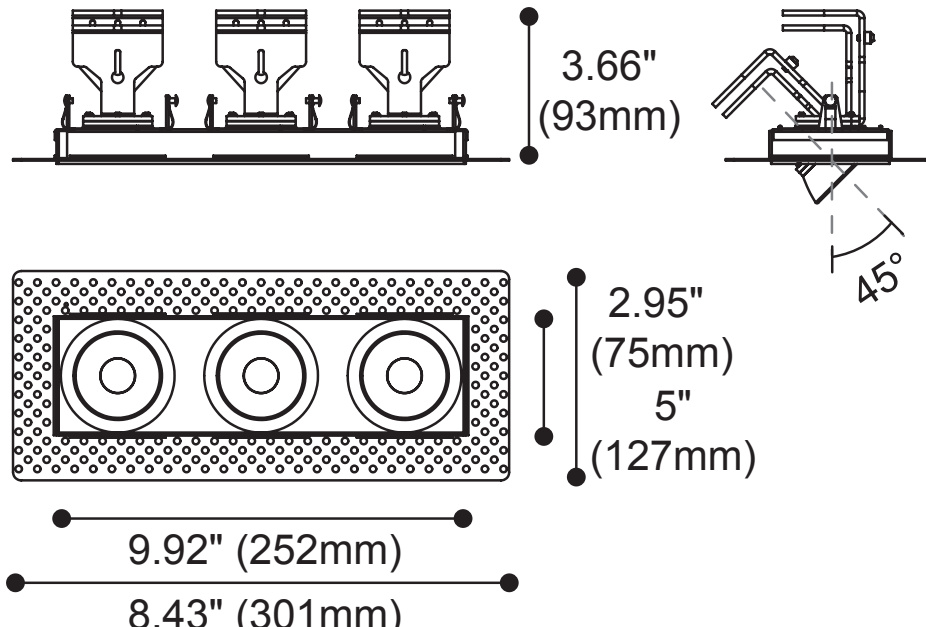
3.66"
(93mm)
45°
2.95"
(75mm)
5"
(127mm)
9.92" (252mm)
8.43" (301mm)